规格承认书

SPECIFICATION FOR APPROVAL

型号（**Model**）： DMJ-PS

规格 （**Spec.**）： 15uF±5% 800V.DC

尺寸（**Size**） ： 42×20×40

编码（**Part Number**） ： IM1560080021101

版本号 Version	更改说明 Description	日期 Date
A/0	初始版本	2022-03-22

编制 **MADE**	审核 **CHECKED**	批准 **APPROVED**	客户承认 **APPROVED**
朱益娟	戴 静	俞广铨	

Application

■Widely used in DC-Link circuit for filtering energy storage

■Can replace electrolytic capacitors, better performance and longer life

■Wind power, photovoltaic power inverter; electric vehicles and hybrid vehicles; welding equipment ,power supplies and induction heating equipment, for the DC link filter

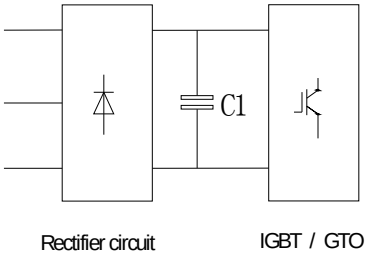

DC Link Capacitance (C1)

Features

■RoHS compliant

Standards: IEC61071

Outline drawing

Unit:mm

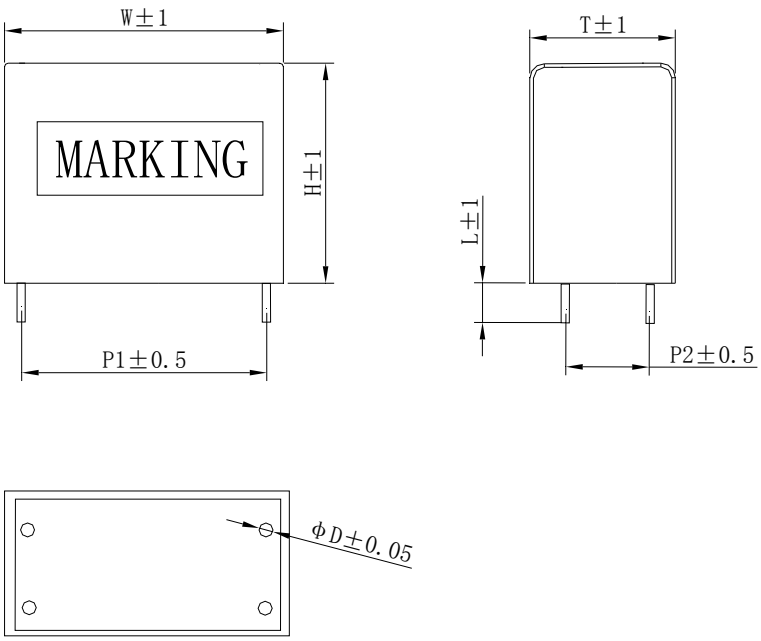

Specification & size

C_N (μF)	U_N(V.DC)	(mm)						
		W	T	H	P1	P2	ΦD	L
15	800	42	20	40	37.5	10.2	1.2	4

Technical data

额定容量	Rated capacitance	C_N	15μF±5%
额定电压	Rated voltage	U_N @70℃	800V.DC
		U_N @85℃	700V.DC
纹波电压	Max. ripple voltage	U_r	≤15%U_N
浪涌电压	Non-recurrent surge voltage	U_s	1200V
额定能量	Rated energy	W_N	4.8Ws
工作电流	Maximum current	I_{rms}	12A @10KHz,70℃
电压爬升率	Voltage climb rate	Dv/dt	22V/μS
峰值电流	Maximum peak current	Î	330A
浪涌电流	Maximum surge current	I_s	990A
等效串联电阻	Series resistance	ESR	≤9.6mΩ @10KHz,70℃
损耗角正切值	Tangent of the loss	tan δ	0.0017(@25℃ 1KHz)
自感	Self inductance	L_e	1nH/mm pitch & lead length used
自放电常数	Self discharge time const.	$C \times R_{is}$	≥10000S (100V.DC 60S)
运行温度	Operating temperature		-40~105°C Above 85°C the rated voltage must be de- rated at 1.25% per °C
存储温度	Storage temperature	$\Theta_{storage}$	-40~105°C
工作寿命	Service life	at $\Theta_{hotspot}$	100000h @1.0U_N,85℃
失效率	Failure quota		10 fit (≤ 1×10^{-9}/h) at 0.5×U_N, 40℃
	Test data		
极间耐压	Voltage test between terminals	Vtt	1.5U_N /10S
极壳耐压	A.C. voltage test terminal/container	Vt-c	3000V.AC/60S
工作海拔高度	Operating altitude		3500m(max)